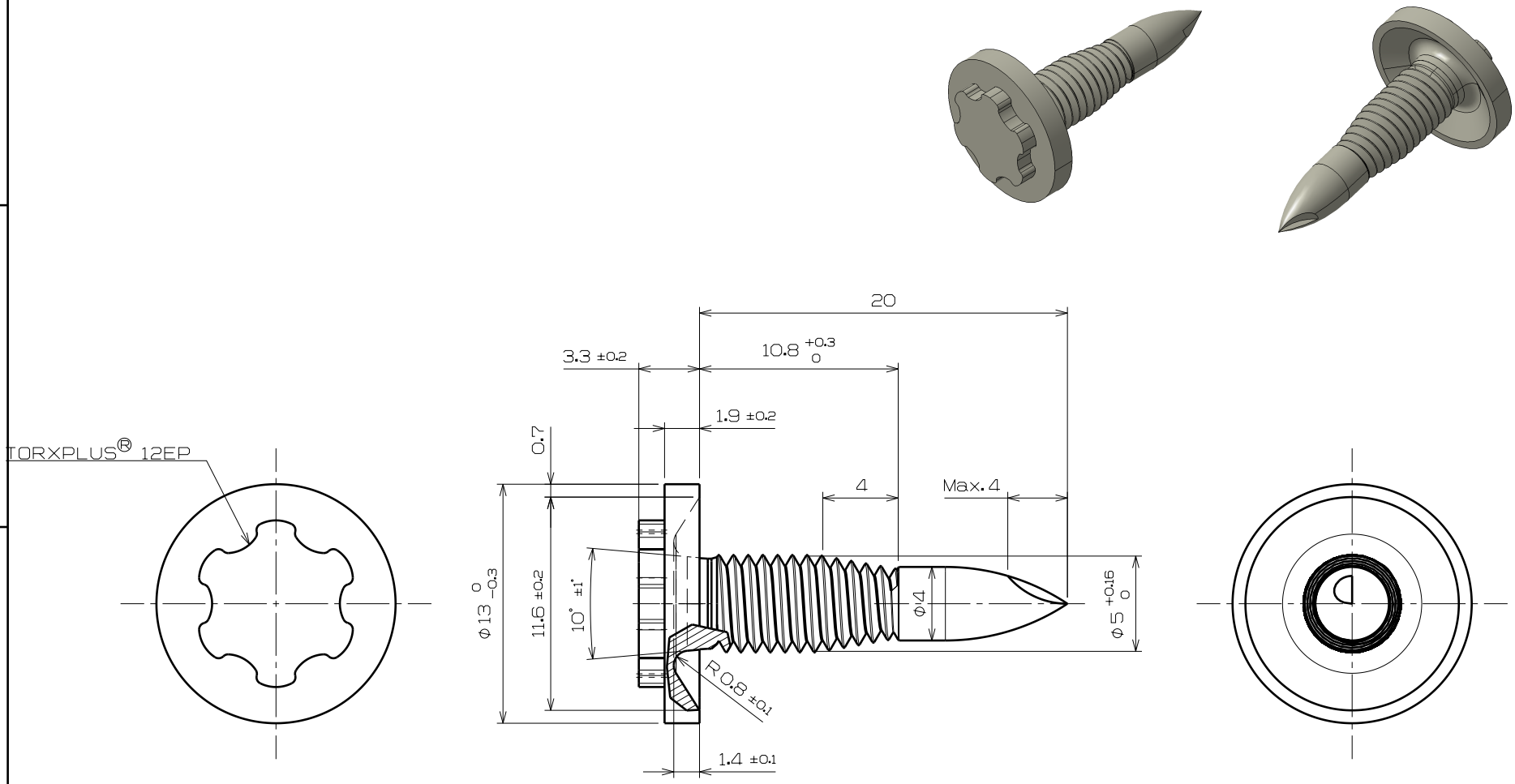
TORXPLUS® 12EP
20
3.3 ±0.2
10.8 +0.3 0
1.9 ±0.2
0.7
4
Max.4
Φ13 0 −0.3
11.6 ±0.2
10° ±1°
Φ4
Φ5 +0.16 0
R0.8 ±0.1
1.4 ±0.1