Hole Size

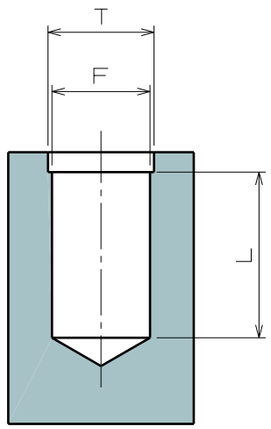

T : 16
F : 14.8±0.2
L : MR×2

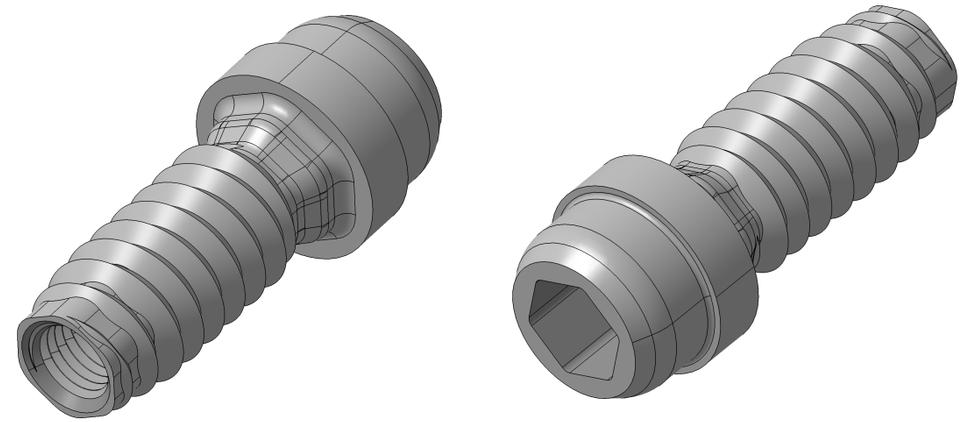

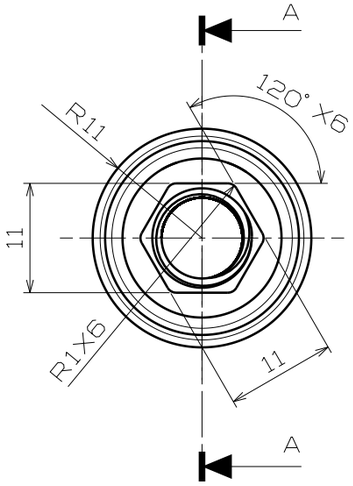

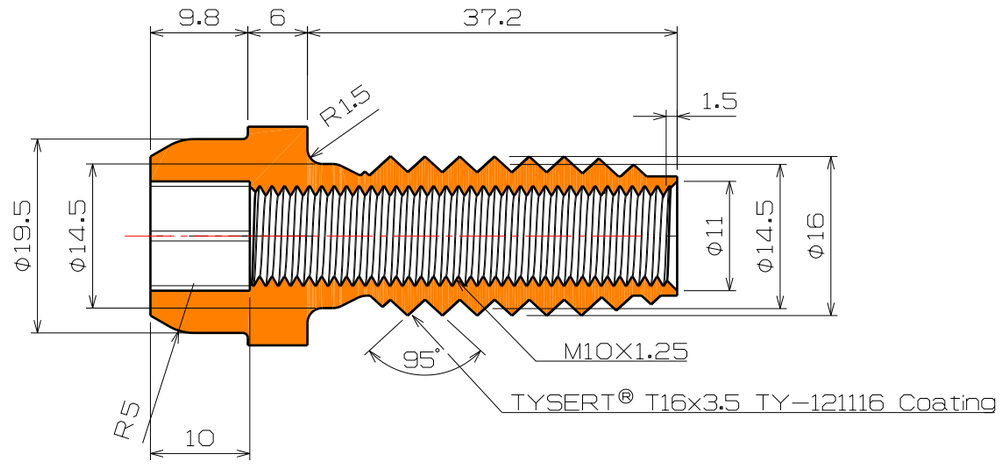
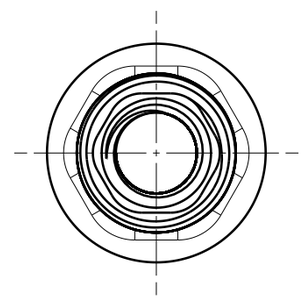
Section View A-A